Operating instructions TSRLF

> Operating instructions

Transformer Switching Relay | Type TSRLF

Installation and commissioning must be undertaken by a qualified person or a person under the supervision of a specialist.

The TSRLF is a control module, that controls Solid state relays of the type of instant switching, in the manner of patented procedures to avoid inrush currents of transformers. Also external Thyristors can be controled in the same manner, to built a transformer switching unit

Attention

Do not apply an external voltage to the control input (terminals S1/S2) for the standard version. The terminals S1 and S2 refer to the lines voltage. The connected contact or opto-coupler transistor should therefore be potential-free and should indicate a testing voltage of 2,5kV. If a wire strap jumper is used instead of a contact between terminals S1 and S2, this should be suitably isolated..

Safety Precautions

The TSRLF- should be installed and commissioned only by suitably trained personnel. Operating the TSRLF- using the control input and without the mains switch results in non-potential isolated switching as parallel to terminals 1 and 2 a thyristor is connected with an additional Snubber- R-C element. Therefore any action on connected transformers or loads on the secondary side, disconnect the TSRLF-.

General

The TSRLF with the external power element - premagnetises the transformer for a short time before each switching-on operation. This is achieved using unipolar voltage impulses. The strength of the premagnetisation is the same for all transformers and should reach the reversing point of the hysteresis curve in the working state. The width of the required voltage impulse must be matched to the various type of transformer such as packet core transformers or toroidal core transformers. (The width of the premagnetising voltage pulses correspond with the width of the air gap in the iron core. No gap at toroid cores = narrow pulses, broad air gap at welded cores = broad pulses.) A potentiometer is available on the TSRLF - to achieve the adjusting of the pulse with.

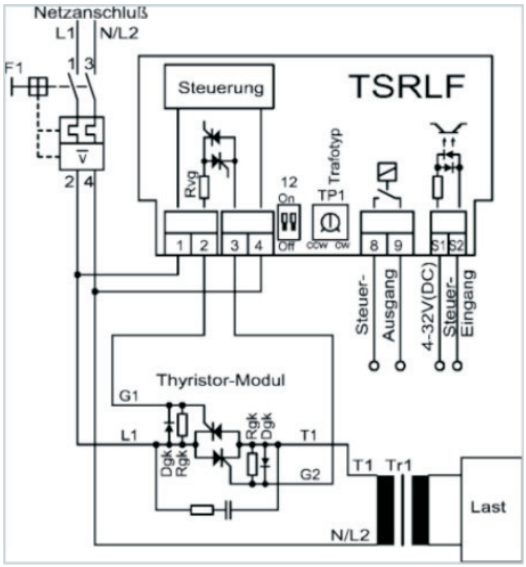

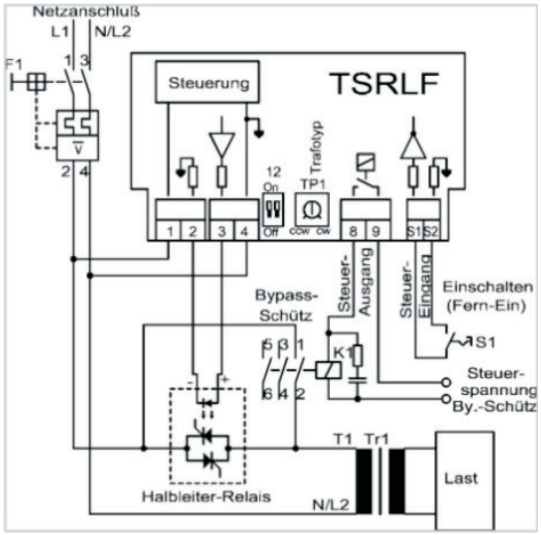

Tauscher Transformatorenfabrik GmbH
Gewerbegebiet Neureut
D - 94078 Freyung

Tel.: +49 (0) 8551/91696-0
Fax: +49 (0) 8551/91696-198

E-Mail: info@tauscher.com
Internet: www.tauscher.com

Stand: 07/2014

Operating instructions TSRLF

Setting The Premagnetisation Using The Trimming-Potentiometer For Transformer Types

- Torroidal core transformers: Use the setting nearly R (nine o clock)
- The correct setting for cut -core transformers (P) can vary between „10 and 2 o'clock".
- C-core transformers: Potentiometer setting between „P" and „R"

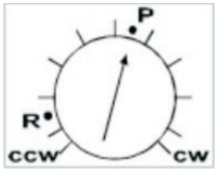

View on to the TSRLF for potentiometer setting::
The picture transformator type must be readable (upright) on the nameplate.

Potentiometer Setting

A direct reading instrument for AC current in series with the TSRLF - (i.e. parallel to opened fusing device) indicates whether or not switching occurs with surge currents. If current peaks do not arise either during or at the end of premagnetisation, then the TSRLF- is correctly set to the transformer (than the indicator on the current meter stand still.) Optimum setting: see the setting instructions below. (The with of the air gap of the Transformer core is the criteria. The with of the premagnetising pulses correspond with the width of the air gap.) The more width of air gap, the more with of premagnetising pulses.

Adjustments Using A Toroidal Core Transformer As An Example

Incorrect Setting	Correct Setting	Incorrect Setting
The premagnetisation is too weak. The Potentiometer is too far to the left. The positive magnetising-voltage pulses are too small. A large negative inrush current is visible after premagnetising.	The premagnetisation is just strong enough. The potentiometer setting is correct. Inrush current is not present. (fits for loaded or unload transformer) Setting of potentiometer is independent of load.	The premagnetisation is too strong. The potentiometer is too far to the right. Large positive magnetisation currrent peaks are visible. Current peaks are visible while premagnetisation
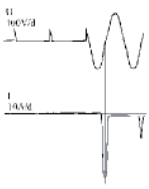	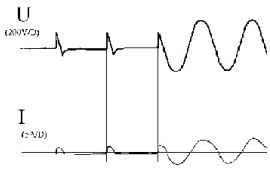	

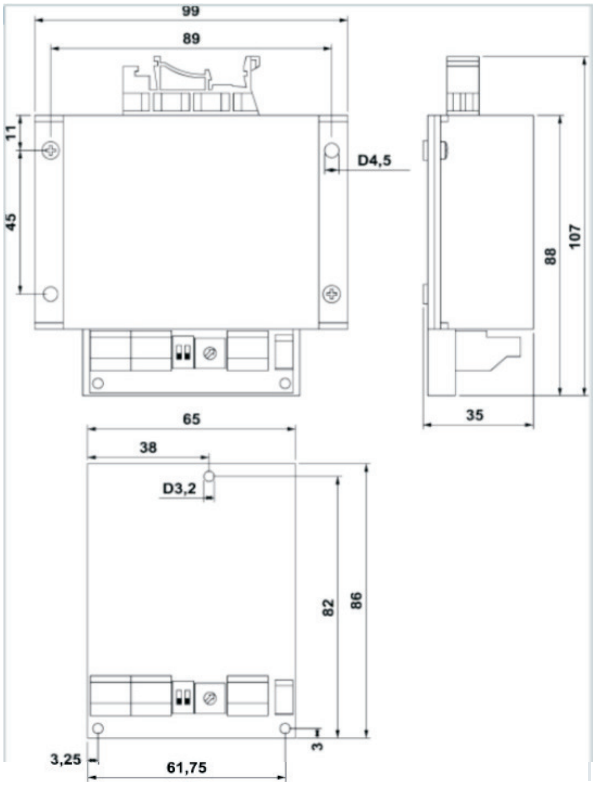

DIP-Switch

Sw.	Function	Position	
1	Control Input	OFF	Control input is active to control the TSRLF
		ON	Self switch on of the TSRLF; When line voltage occurs.
2	Control Ouput	OFF	Full on signalisation
		ON	Control of bypass contactor.

Tauscher Transformatorenfabrik GmbH
Gewerbegebiet Neureut
D - 94078 Freyung

Tel.: +49 (0) 8551/91696-0
Fax: +49 (0) 8551/91696-198

E-Mail: info@tauscher.com
Internet: www.tauscher.com

Stand: 07/2014